KANTHAL®

KANTHAL® FLOW HEATER KFH3-20-400
HEATING GASES UP TO 1100°C

TECHNICAL SPECIFICATION

OPERATIONAL DATA

Permissible process gas:	Air, N2, H2, H2O (other gas mixtures upon request)*
Permissible gas properties:	Particle and condensate free

PARAMETER	SYMBOL	MINIMUM		NOMINAL		MAXIMUM		UNIT	
Inlet gas temperature	T_{in}	0	32	40	104	150	302	°C	°F
Mass flow	$\dot{m}$	2.8		56		112		kg/h	
Operating pressure	p	-		8.6		50		kPa(g)	
Pressure drop	Δp	0.428		8.6		17.1		kPa(g)	
Max. outlet temperature	T_{out}	-		1100	2012	1100	2012	°C	°F
Temperature ramp rate	dT/dt	T_{bundle} < 850°C: ±100 K/min				T_{bundle} > 850°C: ±33.3 K/min			

*All parameters in this table are specified for dry air. Different permissible parameters for other gas mixtures apply.

ELECTRICAL DATA

PARAMETER	SYMBOL	VALUE	UNIT
Rated power	P_{el}	20	kW
Rated voltage	V_{ac}	400	Vac
Rated load current	A_{ac}	29	A
Phase configuration	-	3-Phase; Star connection	-
Type of load	-	Ohmic	-
Rated frequency	f	50/60	Hz
Power factor	cos(φ)	1.00	-
Appliance class	-	Class 1 (PE required)	-
Connection type	-	Process electrodes M6x1	-
Thermocouples	-	4x Thermocouple Type N	-

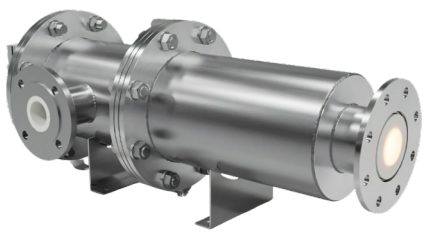

261019-97977

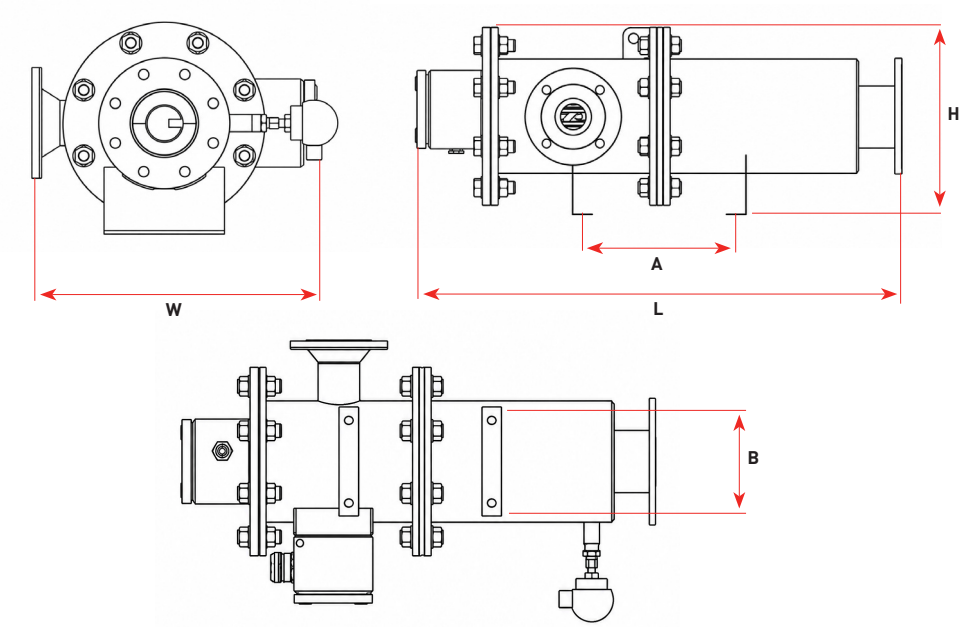

SYSTEM DATA

PARAMETER	SYMBOL	VALUE	UNIT	
Height above sea level	-	< 2000	m	
Ambient temperature	$T_{ambient}$	0-50 / 32-122	°C	°F
Ambient conditions	-	Indoor/Outdoor (protected from direct rain)	-	
Ingress protection code	-	IP 54 (in connected state)	-	
Installation orientation	-	Horizontal/Vertical*	-	
Max. surface temperature	$T_{surface}$	70 / 158	°C	°F

*Vertical installation practices must be discussed with Kanthal

MECHANICAL DATA

PARAMETER	SYMBOL	VALUE	UNIT
Length	L	920	mm
Width	W	480	mm
Height	H	360	mm
Inlet type	-	Flange DN 65 PN 16	EN 1092-1
Outlet type	-	Flange DN 100 PN 16 (red. thickness)	EN 1092-1
Weight	-	77	kg
Installation type	-	Support feet with slotted holes for M10	-

	10KW	20KW	40KW
DESCRIPTION	**ARTICLE NUMBER**	**ARTICLE NUMBER**	**ARTICLE NUMBER**
Temperature sensor replacement set	DFH500477	DFH500478	DFH500479
Overall heater refurbishment	DFH500482	DFH500483	DFH500484